OBAMA-BIDEN TRANSITION PROJECT

THIS DOCUMENT WAS PRODUCED BY AN OUTSIDE PARTY AND SUBMITTED TO THE OBAMA-BIDEN TRANSITION PROJECT.

A Framework for Offshore Wind Energy Development in the United States

Working in partnership:

Massachusetts Technology Collaborative
Renewable Energy Trust

U.S. Department of Energy
Energy Efficiency and Renewable Energy

GE Energy

The development of this document was facilitated by RESOLVE, INC.

Offshore Wind Collaborative Organizing Group

Massachusetts Technology Collaborative

Greg Watson, Vice President for Sustainable Development

Barbara Hill, Project Coordinator, Offshore Wind

Fara Courtney, Ocean Policy Specialist & Principal,
Good Harbor Consulting

U.S. Department of Energy

Peter Goldman, Director
Office of Wind and Hydropower Technologies

Stan Calvert, Chief Engineer
Office of Wind and Hydropower Technologies

Robert Thresher, Director
National Wind Technology Center
National Renewable Energy Laboratory

GE

Eliot Assimakopoulos, Business Development Manager
GE Global Research & Development
Global Technology Development

James Lyons
GE Corporate Research & Development
Chief Engineer

Benjamin Bell
GE Energy
Power Generation Global Development
Offshore Wind - Americas

RESOLVE Team

Abby Arnold, Vice President RESOLVE INC

Bruce Bailey, Principal
AWS True Wind

Suzanne Orenstein, Mediator

The Organizing Group wishes to thank all those who contributed to the development of this document, through participation in workshop sessions, interviews, or informal discussions. A special thanks to MTC Deputy Director Pat Larkin for his invaluable help in guiding the Offshore Wind Collaborative through its early stages. We also greatly appreciate the design and editing contributions provided by Christine Raisig and Emily Dahl of MTC.

Cover Art: Arklow Bank Offshore Wind Power Facility, Ireland - 25 MW. *Courtesy of GE Energy.*
Map: U.S. Continental Shelf Boundary Areas. *Image courtesy of Minerals Management Service.*

September 2005

THIS DOCUMENT WAS PRODUCED BY AN OUTSIDE PARTY AND SUBMITTED TO THE OBAMA-BIDEN TRANSITION PROJECT.

Table of Contents

Executive Summary 2

Introduction, Origins, and Purpose 6

- Introduction 6
- Origins 6
- Purpose 7

Offshore Wind Energy Potential: Background 8

- Overview of Offshore Wind Technology 8
- Wind as a Component of the Energy Mix 9
- Ocean Wind Energy Resources in the United States and Northeast 10
- The Economics of Offshore Wind and Other Energy Resources in the Northeast 11
- The Opportunity to Pursue Offshore Wind Energy 12

Strategies for Addressing Challenges and Achieving Sustainable Offshore Wind Energy Development 13

- 1 Advance Technology Development 13
  - Strategy 1.1 Develop Design Standards for Offshore Wind Energy Systems 14
  - Strategy 1.2 Integrate Environmental Condition and Design Parameters 14
  - Strategy 1.3 Tailor Support Structure Designs to Site-Specific Conditions 14
  - Strategy 1.4 Achieve High Levels of Wind Energy System Availability and Performance through Optimized Approaches to Operations and Maintenance 15
  - Strategy 1.5 Address Power Transmission and Grid Interconnection Issues 15
  - Strategy 1.6 Develop and Leverage Expertise 16
- 2 Achieve Environmental Compatibility 16
  - Overall Approach 17
  - Strategy 2.1 Identify Current Conditions and Trends of Marine Ecosystems and Ocean Uses 18
  - Strategy 2.2 Identify Potential Areas for Offshore Wind Energy Development 18
  - Strategy 2.3 Identify Potential Impacts and Environmental Changes from Offshore Wind Energy Systems. 19
  - Strategy 2.4 Identify Appropriate and Effective Mitigation Strategies for Potential Environmental Impacts and Conflicting Uses 19
  - Strategy 2.5 Document and Quantify Environmental Benefits 20
- 3 Achieve Economic and Financial Viability 20
  - Strategy 3.1 Develop Current Understanding of Costs of Offshore Wind Energy Systems and Implement R&D Opportunities for Cost Reduction 21
  - Strategy 3.2 Evaluate Ownership and Financing Structures and Associated Risks 21
  - Strategy 3.3 Increase Availability of Long-Term Power Purchase Agreements 21
  - Strategy 3.4 Develop Confidence in Technology among Financial, Insurance, and Public Sectors 22
- 4 Clarify Roles for Regulation and Government Policies 22
  - Strategy 4.1 Establish a Process for Siting and Development that Gains Public Acceptance 23
  - Strategy 4.2 Develop Policies with a Tiered and Phased Incentive Program to Foster Early Development of Offshore Wind Energy 24
  - Strategy 4.3 Create Stable Rules and Processes for Transmission and Grid Integration 24
- 5 Establish Leadership, Coordination, Collaboration, and Support 24
  - Strategy 5.1 Establish a Credible Mechanism for Leadership, Collaboration, and Support for Offshore Wind Energy Development 25
  - Strategy 5.2 Create and Maintain a Vision of Offshore Wind as Part of the Mainstream Energy Mix 25
  - Strategy 5.3 Attract, Apply, and Coordinate Resources 26
  - Strategy 5.4 Establish and Implement a Mechanism for Convening Parties Interested in Offshore Wind Energy 26
  - Strategy 5.5 Develop and Support a Coordinated Research Program to Accomplish Technical, Environmental, Economic, and Regulatory Goals 26
  - Strategy 5.6 Support Integration of Activities in All Arenas 26

Closing Comments 27

Participant Lists 28

THIS DOCUMENT WAS PRODUCED BY AN OUTSIDE PARTY AND SUBMITTED TO THE OBAMA-BIDEN TRANSITION PROJECT.

Executive Summary

The offshore renewable sector has changed over the past three years and can no longer be regarded as "tomorrow's potential" but as a developing industry in its own right … With continuing support from national governments and the coming together of the required industrial knowledge there is the potential to develop a new and distinct industry that not only generates clean electricity but also brings major long-term economic benefits, however, this new sector needs stability, commitment and innovation.

The World Offshore Renewable Energy Report 2002-2007
Douglas Westwood Limited for Renewables UK

The creation of this document, *A Framework for Offshore Wind Energy Development in the United States*, was organized and supported by the United States Department of Energy (U.S. DOE), GE, and the Massachusetts Technology Collaborative (MTC) in anticipation of the growing interest in offshore wind as an energy source. The potential to address a variety of serious environmental and energy supply concerns and leverage significant economic and technology development opportunities calls for a focused, coordinated approach to planning, research and development, and policy development for this new industry. Each member of this Organizing Group arrived at this conclusion from different perspectives that proved to be both complementary and synergistic.

MTC administers the Renewable Energy Trust, which seeks to maximize environmental and economic benefits for the Commonwealth's citizens by fostering the emergence of sustainable markets for electricity generated from renewable sources. GE built, operates, and owns Ireland's first offshore wind plant, demonstrating its 3.6 megawatts (MW) offshore wind equipment and services technologies for the growing offshore market. The U.S. DOE supports wind energy research and development, and is expanding efforts to increase the viability of offshore wind power as a substantial opportunity to help meet the nation's growing needs for clean, affordable energy. These interests were the catalyst driving the collaboration, initially focusing on the Northeast, to explore the potential for the creation of a U.S. offshore wind energy industry.

Wind energy has been the world's fastest growing energy source on a percentage basis for more than a decade. If growth trends continue at the same pace, wind capacity will double approximately every three to four years. This trend can be largely attributed to the public's growing demand for clean, renewable energy and to wind technology's achievements in reliability and cost-effectiveness.

Offshore wind has emerged as a promising renewable energy resource for a number of reasons: the strongest, most consistent winds are offshore and in relative proximity to major load centers—particularly the energy-constrained northeastern United States; the long-term potential for over-the-horizon siting and undersea transmission lines counters the aesthetic and land-use concerns associated with on shore wind installations; and wind as a fuel is both cost-free and emission-free.

More than 600 MW of offshore wind energy is currently installed worldwide—all of it off the coast of Europe in shallow waters less than 20 meters deep. However, with serious projects being proposed in the waters off the Northeast coast, the Mid-Atlantic coast, and the Gulf Coast, interest in developing offshore wind energy resources in the United States is clearly growing. The U.S. DOE estimates that there are more than 900,000 MW of potential wind energy off the coasts of the United States, in many cases, relatively near major population centers. This amount approaches the total current installed U.S. electrical capacity.

In January 2004, New England came dangerously close to experiencing a blackout during a severe cold spell as a result of limited natural gas supplies being diverted away from electricity generating plants to meet demands for home heating.[1] Those in charge of managing New England's electric grid are uncertain

1. ISO New England, Inc., Market Monitoring Department. *Interim Report on Electricity Supply Conditions in New England During the January 14-16, 2004 "Cold Snap"*. May 10, 2004.

THIS DOCUMENT WAS PRODUCED BY AN OUTSIDE PARTY AND SUBMITTED TO THE OBAMA-BIDEN TRANSITION PROJECT.

Nysted Offshore Wind Farm
at Rødsand, Denmark
Photo by Laura Wasserman

how the region will continue to meet peak demand for electricity beyond the year 2006. Offshore wind is one of the Northeast's local renewable energy sources with the potential to address the anticipated unmet demand.

States in other regions—including the Mid-Atlantic, the Gulf Coast, and the Great Lakes—are also beginning to consider the potential role for offshore wind in addressing their particular energy concerns, paving the way for a national offshore wind energy collaboration.

Sustainably tapping the U.S. Outer Continental Shelf's vast wind resource will require addressing formidable engineering, environmental, economic, and policy challenges. This *Framework* identifies these challenges and suggests a comprehensive approach to overcoming them. A principal focus is to broaden the available wind resource potential through the development of technologies and policies that will allow turbines to be responsibly sited in deeper water and further offshore.

Interestingly, the move towards offshore wind energy development is leading to a convergence of two of society's most pressing environmental challenges: to curtail the emissions of noxious and heat-trapping gases being released into the atmosphere and to sustainably manage our ocean resources.

Earth's oceans and atmosphere are both in peril. As recent studies document, our oceans face a greater array of problems than ever before in history.[2] In particular, unprecedented concentrations of carbon dioxide, nitrogen oxide, and other emissions resulting from the combustion of fossil fuels threaten to alter the composition of the atmosphere and undermine the integrity of both aquatic and terrestrial ecosystems. An aggressive push for renewable energy production will start us down a path to reducing these environmental and public health threats.

The critical, overarching context for this renewable energy development initiative is the urgent need for policies to guide the sustainable use and conservation of ocean resources, acknowledged at the state and national levels. It is imperative that offshore wind energy is included as an integral part of the ocean management dialogue and that the development of a U.S. offshore wind energy industry is conducted in a way that supports the improved health and management of our nation's marine resources.

The *Framework* lays out the challenges and suggested strategies for addressing them in the following five areas:

- Technology Development
- Environmental Compatibility
- Economic and Financial Viability
- Regulation and Government Policies
- Leadership Coordination

Issues and proposed approaches were identified with input from more than 60 experts via interviews and workshops sponsored by the Organizing Group. Participants represented a wide range of relevant expertise and perspectives. An effort was made to encompass the full range of questions and concerns regarding the potential for siting wind energy systems offshore, and engagement in this process was not limited to parties with a positive stance on offshore wind energy development.

2. The Pew Charitable Trusts. *America's Living Oceans: Charting a Course for Sea Change*. 2003.

THIS DOCUMENT WAS PRODUCED BY AN OUTSIDE PARTY AND SUBMITTED TO THE OBAMA-BIDEN TRANSITION PROJECT.

Strategies for Addressing Challenges and Achieving Sustainable Offshore Wind Energy Development:

Advance Technology Development

Current offshore wind energy system designs have been adapted from land-based versions and deployed in shallow waters off northern European coastlines for more than a decade. Offshore wind energy technology is evolving toward larger-scale and fully marinized systems that can be deployed in a range of water depths across a wider range of geographical areas.

Strategies:
- Develop Design Standards for Offshore Wind Energy Systems
- Integrate Environmental Condition and Design Parameters
- Tailor Support Structure Designs to Site-Specific Conditions
- Achieve High Levels of Wind System Availability and Performance through Optimized Approaches to Operations and Maintenance
- Address Power Transmission and Grid Interconnection Issues
- Develop and Leverage Expertise

Achieve Environmental Compatibility

Beyond technical and economic issues, the sustainability of an offshore wind power industry in the United States will depend on focusing on environmental compatibility and impact mitigation as high design priorities, and on improving understanding of the interactions that will occur between offshore wind development and marine ecosystems in the United States.

Strategies:
- Identify Current Conditions and Trends of Marine Ecosystems and Ocean Uses
- Identify Potential Areas for Offshore Wind Energy Development
- Identify Potential Impacts and Environmental Changes from Offshore Wind Energy Systems
- Identify Appropriate and Effective Mitigation Strategies for Potential Environmental Impacts and Conflicting Uses
- Document and Quantify Environmental Benefits

Achieve Economic and Financial Viability

Although today's costs of offshore wind energy production are higher than onshore, expectations are that several factors working together will make the development of offshore wind energy sources more cost effective. These factors include technology innovations, stronger wind regimes, economies of scale from large-scale development, close proximity to high-value load centers, and incentive programs responding to the public's growing demand for clean energy.

Strategies:
- Develop Current Understanding of Costs of Offshore Wind Energy Systems and Implement Research and Development Opportunities for Cost Reduction
- Evaluate Ownership and Financing Structures and Associated Risks
- Increase Availability of Long-Term Power Purchase Agreements
- Develop Confidence in Technology among Financial, Insurance, and Public Sectors

THIS DOCUMENT WAS PRODUCED BY AN OUTSIDE PARTY AND SUBMITTED TO THE OBAMA-BIDEN TRANSITION PROJECT.

Clarify Roles for Regulation and Government Policies

Achieving a cost-competitive offshore wind energy industry will require significant advances in the technology and policy arenas. Many of the challenges require an integrated approach. For example, public acceptance of offshore wind facilities is linked to development of a credible planning and permitting process that ensures the recognition of public benefits from use of the resource.

Strategies:

- Establish a Process for Siting and Development that Gains Public Acceptance
- Develop Policies with a Tiered and Phased Incentive Program to Foster Early Development of Offshore Wind Energy
- Create Stable Rules and Processes for Transmission and Grid Integration

Establish Leadership, Coordination, Collaboration, and Support

A national collaborative can play an important role as it works to coordinate and leverage the resources to address the challenges in an efficient and synergistic manner. The level of resources needed to fund a collaborative approach will depend on the form the collaborative takes and on the roles its members play in providing and recruiting technical and financial support. Regional collaboratives will also be useful for addressing regional and local planning challenges and needs.

Strategies:

- Establish a Credible Mechanism for Leadership, Collaboration, and Support for Offshore Wind Energy Development
- Create and Maintain a Vision of Offshore Wind as Part of the Mainstream Energy Mix
- Attract, Apply, and Coordinate Resources
- Establish and Implement a Mechanism for Convening Parties Interested in Offshore Wind Energy
- Develop and Support a Coordinated Research Program to Accomplish Technical, Environmental, Economic, and Regulatory Goals
- Support Integration of Activities in All Arenas

Next Step

The next step in this process will be to create an Organizational Development Plan for an *offshore wind collaborative*, with an initial focus on the waters of the Atlantic off the Northeast coast. The plan will propose a clear role for this new partnership in implementing the agenda put forth in the *Framework*, making the case for establishing a multi-sector cooperative effort to address key aspects of the U.S offshore wind energy development strategy. The plan will describe the organizational structure; define relationships and responsibilities among collaborators; define specific opportunities and benefits of participation for industry, government, and non-governmental partners; and establish funding needs and sources.

THIS DOCUMENT WAS PRODUCED BY AN OUTSIDE PARTY AND SUBMITTED TO THE OBAMA-BIDEN TRANSITION PROJECT.

Introduction, Origins, and Purpose

Introduction

Offshore wind is an emerging renewable energy source. It is realizing rapid growth in Europe, where national commitments to greenhouse gas reductions are driving renewable energy development. In the northeastern United States, two of the country's first large offshore wind energy projects are currently involved in the planning and permitting process. There are several supporting factors encouraging broader wind energy development in the United States, including growing public demand and policy initiatives for clean power sources, fossil fuel price and supply volatility, and concerns over climate change. Although there are significant opportunities for continuing wind energy development on land in some parts of the country, the future potential for offshore development may be even larger. The magnitude of the offshore potential rivals the current installed electrical capacity of the United States. Thus, it is timely to look ahead to determine how offshore wind can become a meaningful component of the U.S. energy mix.

This document, *A Framework for Offshore Wind Energy Development in the United States*, lays out the pathway for defining and achieving the potential for offshore wind energy in the United States, with an emphasis on the Northeast as an initial focus for regional development.

The United States Department of Energy (U.S. DOE), Massachusetts Technology Collaborative (MTC), and GE organized and supported preparation of this document to identify challenges facing the development of a robust offshore wind energy industry in the United States and to stimulate dialogue on how to sustainably develop offshore wind power. This Organizing Group reached out to more than 60 interested parties—some already supportive of offshore wind energy development and others with serious concerns about this new type of ocean-based development. These included representatives from federal and state agencies, industry, non-governmental organizations, and research institutions. The Organizing Group sincerely thanks all who contributed their time and expertise to the development of this *Framework*.

Origins

In the summer of 2003, representatives from GE approached MTC with the idea of establishing a collaborative process to explore the opportunities for developing the wind resources in deep water off the coast of New England. GE had been working with researchers from the University of Massachusetts (UMass) Massachusetts Institute of Technology (MIT), and the Woods Hole Oceanographic Institution (WHOI) on a research agenda for deep-water offshore wind, but was looking for a more comprehensive approach that would engage regulatory agencies, policy makers, environmental advocacy groups, and other industry partners as well.

In 2002, MTC designed and implemented the Cape and Islands Offshore Wind Stakeholder Process to provide the public with an objective forum to discuss the proposal by Cape Wind Associates to construct 130 wind turbines in Nantucket Sound off the coast of Cape Cod. The process created a venue for engaging more than 40 stakeholders in a series of meetings, with the primary objective of making the

THIS DOCUMENT WAS PRODUCED BY AN OUTSIDE PARTY AND SUBMITTED TO THE OBAMA-BIDEN TRANSITION PROJECT.

joint federal/state/regional permitting process for the Cape Wind project as transparent and understandable as possible to facilitate productive participation by concerned citizens.

GE hoped that MTC could develop a similar collaborative process that would lead to a strategy for deploying offshore wind energy systems in a way that anticipated and avoided some of the more controversial issues surrounding projects currently in development.

The Commonwealth of Massachusetts is uniquely positioned to pursue the sustainable development of its offshore wind resources. It was among the first states to establish a Renewable Portfolio Standard (RPS) that sets a target for the amount of electricity sold on the retail market that must be generated from renewable energy sources (4% by 2009). New England's increasing dependence on natural gas has created a need for alternative energy sources. Offshore wind energy is an attractive option due to the significant wind resources off the coast, and the limited land resources that make the development of utility-scale, land-based wind farms in New England problematic.

Early in 2004, representatives from GE and MTC were invited to Washington to discuss the idea of a collaborative process with staff from the U.S. DOE's Wind and Hydropower Technologies Program. U.S. DOE was considering funding offshore wind research and development projects as part of its Low Wind Speed Technology (LWST) program, and expressed interest in the concept. Following a series of meetings in Massachusetts, MTC, GE, and U.S. DOE agreed to commit funds and staff time to pursue the creation of a collaborative planning process and this resulting *Framework* document.

MTC, GE, and U.S. DOE provided funding for a series of short-term pilot research projects drawn from the agenda developed earlier in conjunction with GE as an initial step to support the ongoing participation of MIT, WHOI, and UMass in the dialogue on the future of offshore wind energy development in the United States. These projects address some baseline technical and policy questions.

To initiate the overall collaborative planning process, the Organizing Group issued a joint Request for Proposals in July 2004 and RESOLVE, Inc., was hired to facilitate development of this *Framework.* The Organizing Group worked with RESOLVE to identify individuals representing the environmental, industry, regulatory, and marine interests whose input would be critical. These individuals were invited to a two-day workshop in Washington, D.C., in February 2005 to help develop the scope for this *Framework* by exploring the full range of technical questions, environmental concerns, and possible strategies for addressing them. A second meeting was held in Boston for those who were unable to attend the February workshop.

Purpose

The purpose of this *Framework* is to propose an agenda designed to address the technical, environmental, economic, and regulatory issues critical to enabling the development of offshore wind energy as a commercially, politically, socially, economically, and environmentally sustainable energy resource. A principal focus is to broaden the available wind resource potential through the development of technologies and policies that will allow turbines to be responsibly sited in deeper water and further offshore.

THIS DOCUMENT WAS PRODUCED BY AN OUTSIDE PARTY AND SUBMITTED TO THE OBAMA-BIDEN TRANSITION PROJECT.

Offshore Wind Energy Potential: Background

Overview of Offshore Wind Technology

This section discusses the primary components of an offshore wind energy system: turbines, towers, foundations, and the balance of plant (supplemental equipment necessary for a fully commissioned system). An illustration of an offshore wind turbine is shown below.

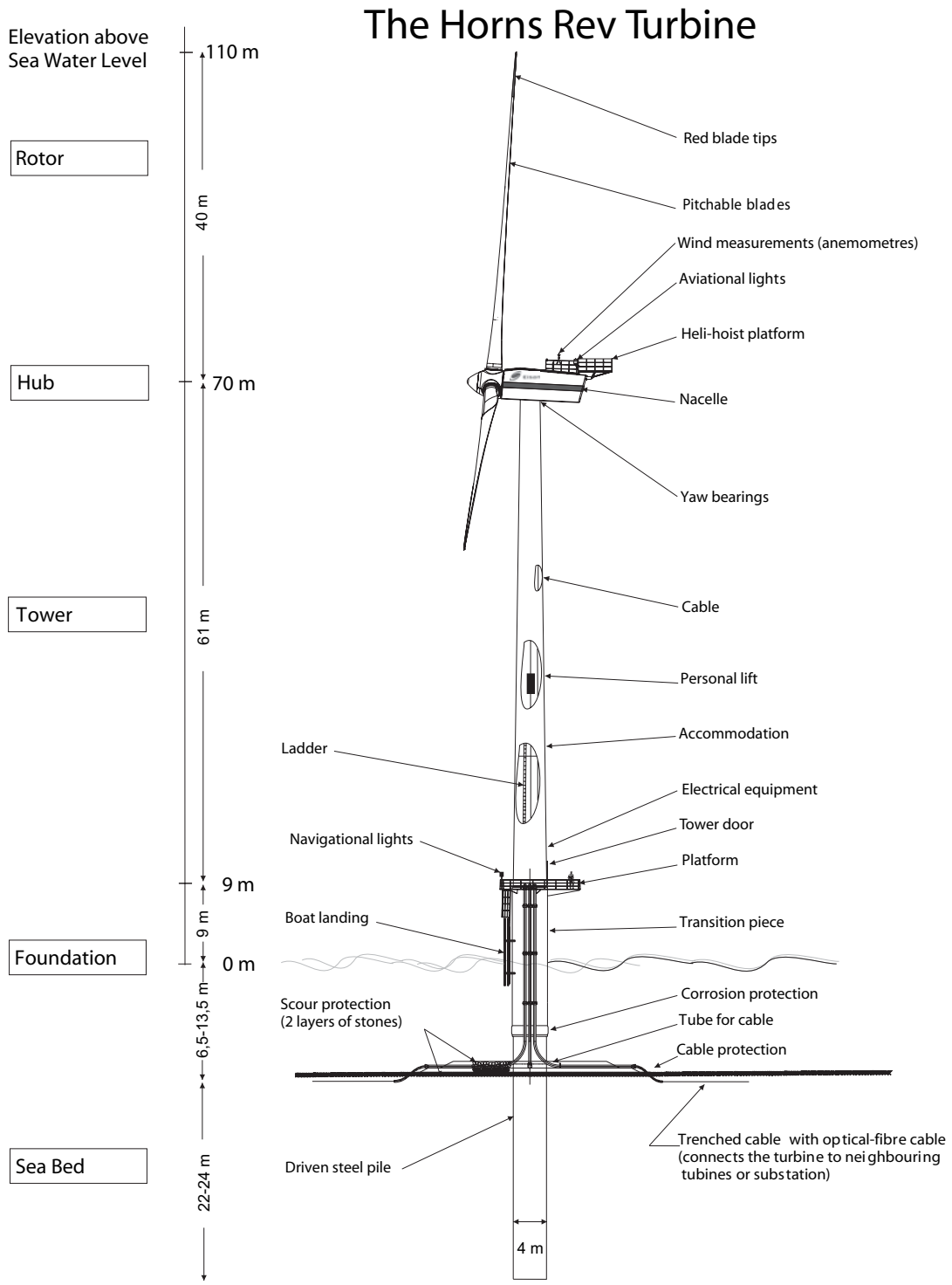

Principal Components and Dimensions of an Offshore Wind Turbine

Graphic courtesy of Horns Rev wind project, Denmark (http://www.hornsrev.dk). Copyright Elsam A/S.

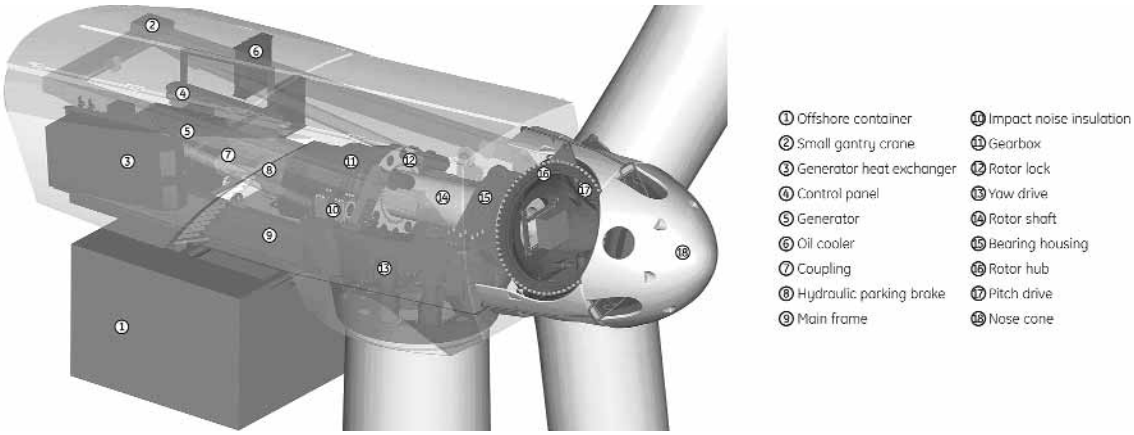

Principal Components of an Offshore Wind Turbine Layout

Graphic courtesy of GE Energy (http://www.gepower.com/businesses/ge_wind_energy/en/index.htm).

The primary and most visible part of an offshore wind energy system is the turbine. Most turbines operating today are composed of a three-bladed rotor connected through the drive train to the generator, which are housed in the nacelle.

Several manufacturers have recently engineered wind turbines specifically for offshore applications. These machines are based on proven technology but have been designed to meet the needs of a more remote and demanding offshore environment. Manufacturing trends indicate that future turbines will be larger than today's typical size of 2 to 4 megawatts (MW).

The tower provides support to the turbine assembly, housing for balance of plant components, and importantly, a sheltered interior means of access for personnel from the surface.

Wind turbine support structure design is driven by site-specific conditions: water depth, wind/wave conditions, and seabed geology. The three standard offshore foundation types in shallow water are monopile, gravitation, and multi-leg, with the monopile type being the most common. Floating turbines may be feasible as long-term options in even deeper water.

The combined action of wind and waves introduces a whole new set of engineering challenges to the design of these wind energy systems operating in offshore waters.

Additional components of an offshore wind project are the undersea electrical collection and transmission cables, the substation, and the meteorological mast. Electrical cabling is split into two functions: collection and transmission. The collection cables connect series of turbines together and are operated at a distribution grade voltage. The outputs of multiple collection cables are combined at a common collection point (or substation) and stepped up in voltage (such as 69, 115, or 138 kilovolts) for transmission to shore. The transmission cable(s) delivers the project's total output to the onshore electric grid, where the power is then delivered to loads. A substation is typically sited offshore but it can alternatively be sited onshore.

Most wind energy plants have a meteorological mast that plays an important role in the project development process and serves two primary purposes. First, the meteorological mast is erected to collect on-site wind resource data at multiple heights. The measurement program is generally conducted for a year to verify the project area's meteorology and sea state conditions. Second, after the wind park is installed and commissioned, the data from the meteorological mast serves new functions, such as power performance testing, due diligence evaluation, and operation maintenance management.

Wind as a Component of the Energy Mix

Wind energy has been the world's fastest growing energy source on a percentage basis for more than a decade. If growth trends continue at the same pace, wind capacity will double approximately every three to four years. This trend can be largely attributed to the public's growing demand for clean, renewable energy sources and to wind technology's achievements in reliability and cost-effectiveness.

THIS DOCUMENT WAS PRODUCED BY AN OUTSIDE PARTY AND SUBMITTED TO THE OBAMA-BIDEN TRANSITION PROJECT.

The cost of wind power has fallen by 80% over the past 30 years, making it one of today's lowest-cost sources of electricity. Despite this growth, wind power still represents less than 1% of the total electricity generation base of the United States.

At the end of 2004, the current worldwide installed wind capacity exceeded 47,300 MW. Most of this is based in Europe, with Denmark and some regions of Spain and Germany realizing 10% to 25% of their electricity from wind-based generation. The United States accounts for 14%, or 6,740 MW, of the world's total wind power. This amount meets the electricity requirements of more than 1.6 million average American households. By the year 2020, the U.S. wind industry projects that 100,000 MW of wind can be built in the country. This would supply 6% of the nation's electricity at that time, which is nearly as much electricity as hydropower provides the nation with today.

Boston's Newest Landmark, the International Brotherhood of Electrical Workers' Wind Turbine off Interstate 93

Besides its demonstrated cost competitiveness onshore, wind is an attractive energy option because it is a clean, indigenous, and non-depletable resource, with long-term environmental and public health benefits. Once a wind plant is built, the cost of energy is known and not affected by fuel market price volatility. This, along with its economic benefits in terms of employment through manufacturing, construction and operational support, makes wind an attractive technology with which to diversify the nation's power portfolio and help relieve the pressure on natural gas prices.

The growth of wind energy in the United States has been impeded by several expiration/renewal cycles of the federal Production Tax Credit (PTC), inhibiting sustainable momentum. State incentive programs (e.g., Renewables Portfolio Standards, Systems Benefit Charge programs) have provided some market opportunities and led to regional growth spurts. The European experience, in contrast, has been policy driven with long-term development goals and time horizons. This has succeeded in making Europe the home to the majority of the world's wind energy development. It has also spurred the development of offshore wind, which is seen as a solution to dwindling siting opportunities on land.

The United States as a whole has abundant acreage and contains large pockets of windy rural lands, most of which are found in the sparsely populated areas west of the Mississippi. With slightly more than half the country's population living in the coastal zone, it would be necessary to upgrade the transmission grid to allow for the interstate transfer of large amounts of wind power to the population centers. This would require huge investments, preceded by lengthy regulatory and legislative approvals. Tapping the strong winds offshore, which are much closer to urban load centers, can provide an alternative to these transmission challenges.

Ocean Wind Energy Resources in the United States and Northeast

Modeling studies of the wind resources along the east and west coasts of the United States indicate large areas of strong winds (greater than 7.5 meters per second) within 50 nautical miles of shore. Additional resources are available in the Gulf Coast and Great Lakes regions, but these have yet to be fully characterized. These windy areas are substantially greater in size than those on land along the shorelines and within the adjacent interior spaces. The National Renewable Energy Laboratory (NREL) has determined that the offshore resource between 5 and 50 nautical miles along the Atlantic and Pacific coasts alone could support up to roughly 900 gigawatts (GW) of wind generation capacity—an amount similar to the current installed U.S. electrical capacity.[3] This estimate excludes significant areas that will likely be found development-prohibitive due to environmental concerns, and competing ocean uses. Even as these general exclusions are refined in the future, the vast potential for offshore wind energy is compelling.

Most of the total potential offshore wind resources exist relatively close to major urban load centers, where high energy costs prevail and where opportunities for wind development on land are limited. This is especially true in the densely populated Northeast, where nearly one-fifth of the national population lives on less than 2% of the total land area. At the beginning of 2005, there were only 184 MW of wind generation based in this region, or less than 3% of the country's total wind capacity. The

3. Musial, W. and S. Butterfield. *Future for Offshore Wind Energy in the United States*. Proceedings of EnergyOcean 2004 Conference, NREL/CP-500-36313. 2004.

lack of alternatives to natural gas and coal, scarcity of large open spaces available to utility-scale wind development, and the difficulty of importing large amounts of wind energy from other parts of the country using the existing transmission grid will greatly enhance the appeal of offshore wind energy development in the Northeast.

Offshore wind energy is also an attractive option for the Northeast at this time because slightly more than half the country's identified offshore wind potential is located off the New England and Mid-Atlantic coasts, where water depths generally deepen gradually with distance from shore. While most of the Northeast and Mid-Atlantic's development potential is in deep water (greater than 30 meters), the initial siting of offshore wind systems in relatively shallow waters will facilitate a transition to deeper waters further from shore as the technology is advanced. The West Coast does not offer a similar proving ground because water depths drop off sharply close to shore.

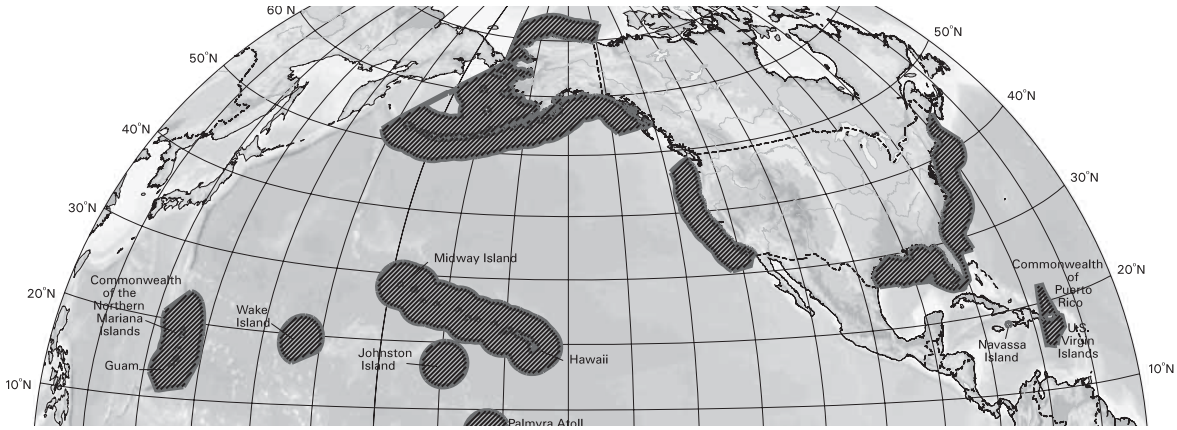

U.S. Continental Shelf Boundary Areas
Image courtesy of Minerals Management Service.

The Economics of Offshore Wind and Other Energy Resources in the Northeast

Conventional energy prices are expected to climb. Energy supply and price volatility are significant risks as well, if recent experience with oil, gas, and coal is any indication. The Northeast is particularly vulnerable because the region has virtually no indigenous supply of natural gas and oil, which are responsible for a large fraction of the region's baseload electricity supply and the majority of its peaking capability. As the Northeast seeks indigenous alternatives to oil and natural gas, offshore wind is among the most promising options.

European offshore wind project costs generally range between $0.08 and $0.15 per kilowatt-hour, which is almost double that of onshore projects. Construction and accessibility, which are the leading cost drivers, are much more difficult at sea. For example, the majority of the cost of an offshore wind project is attributable to its balance of plant components, including the foundation/support structure, installation, and transmission, as opposed to an onshore project, where most of the costs reside with the wind turbines. The high construction costs for offshore development make cost reduction, particularly in the balance of plant components, a key component of achieving competitive offshore wind energy development.

Historically, as new technologies become commercially available, costs come down due to increased efficiency, reduced service requirements, and economies of scale, even when there are initially steep learning curves. For onshore wind development, capital costs have dropped by 15% on average for every doubling of capacity. The European Union predicts there will be at least 40,000 MW of offshore wind energy in Europe by the year 2020, representing an annual growth rate of 30% from the current 600 MW. This compares with an actual annual growth rate of 35% during the past seven years for all wind energy development in Europe. For U.S. offshore wind energy development, taking advantage of what has been learned from offshore oil and gas marine construction can contribute to wind energy cost reduction efforts.

THIS DOCUMENT WAS PRODUCED BY AN OUTSIDE PARTY AND SUBMITTED TO THE OBAMA-BIDEN TRANSITION PROJECT.

The energy scenario for the Northeast pertains not only to price and supply, but to environmental quality as well. A reduction in greenhouse gases and other pollutants from fossil fuel plants is a regional priority within the regulatory and legislative bodies of most states. Offshore wind energy has the potential to make a favorable contribution to this scenario because of its projected downward cost trajectory, its vast supply within close proximity of major load centers, and its status as a clean, non-polluting technology. All three issues—cost, supply, and environmental quality—will ultimately determine the future value and desirability of all energy sources, including offshore wind.

The Opportunity to Pursue Offshore Wind Energy

Interest and experience in offshore wind energy development is growing. European countries have been installing turbines off their coastlines for more than a decade, while the United States is getting started with two serious project proposals located off the coasts of Massachusetts and New York. Sustaining and building on this momentum will require leadership and the collective action of all interested parties to pursue a logical path toward an achievable goal.

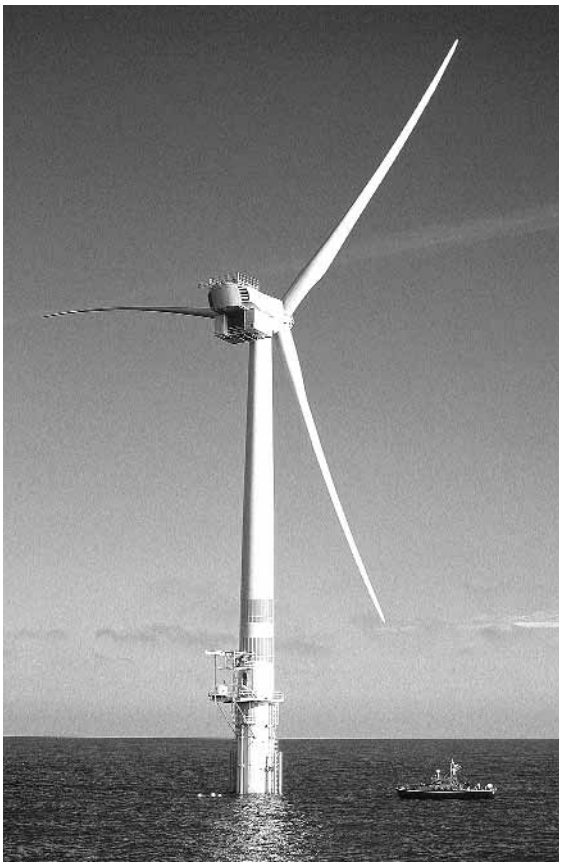

Arklow Bank Offshore Wind Power Facility, Ireland

Offshore wind energy is a vast resource with tremendous potential for addressing future energy needs and spurring new economic development opportunities. But as a relatively young industry having no track record in the United States, there is much to be learned about its challenges and benefits; the unknowns are great. Therefore, it is imperative that those having common interests in environmental quality, energy security, and economic vitality work together so that the benefits of offshore wind energy can be realized.

Coincident with the increased interest in production of electricity from winds offshore is the renewed attention to development of policy directed at offshore ocean uses. The work of the U.S. Commission on Ocean Policy and a parallel effort by the Pew Oceans Commission have focused public attention on the fragile, complex nature of the marine environment; and the importance of this public trust resource to environmental and economic health of the country. The U.S. Executive Branch, Congress, and private and non-governmental sectors are now considering ways to enhance governance and regulations associated with the development and conservation of ocean resources. The integrated, careful approach to building an offshore wind industry in the United States proposed in this *Framework* has the potential to significantly support and inform this move towards more effective, sustainable ocean management.

THIS DOCUMENT WAS PRODUCED BY AN OUTSIDE PARTY AND SUBMITTED TO THE OBAMA-BIDEN TRANSITION PROJECT.

Strategies for Addressing Challenges and Achieving Sustainable Offshore Wind Energy Development

This section presents the details of the *Framework* for sustainable offshore wind energy development in the United States. It lays out the challenges and suggested strategies to address each in the following five areas:

- Technology Development
- Environmental Compatibility
- Economic and Financial Viability
- Regulation and Government Policies
- Leadership Coordination

The activities are categorized by the general timeframe in which efforts would likely occur or reach completion: near term, medium term, and long term. These time frames are approximate in nature and dependent on several factors. They are mainly intended to define the relative timing and sequence of activities.

The activities reflect the results of individual consultation and workshop discussions with a wide range of interested parties representing a broad spectrum of interests. The activities also are interdependent to varying degrees, with outcomes likely affecting each other.

1 Advance Technology Development

Advance Technology Development

Current offshore wind system designs have been adapted from land-based versions and deployed in shallow waters off northern European coastlines over the past dozen years. To date, monopile and gravity foundation designs have been suitable for this environment. Offshore wind technology is evolving toward larger-scale and fully marinized systems that can be deployed in a range of water depths across a wider range of geographical areas.

Offshore wind systems must be tailored to the marine environment. For the support structure, variable site conditions in terms of water depth, wave spectra, currents, sea bed geology, and other factors will require the availability of multiple design options, each one suitable to a particular class of design criteria. Offshore system designs are in the early stages of development—with new technologies emerging—that will need to be fully tested and successfully demonstrated before an offshore wind industry can emerge and realize its potential.

Pathways to achieving long-term success lie partly in gaining a better understanding of the environmental conditions that offshore structures must accommodate in the Atlantic waters off the Northeast coast, and how these structures will interact with both the physical and biological environment. Knowledge gaps can be closed through targeted research and measurement programs. Pathways to success also rely on leveraging the knowledge resident in marine research and engineering disciplines, including the offshore oil and gas industry, which has built and maintained offshore structures for decades. Also, engagement with the international offshore wind industry will provide invaluable lessons learned from offshore projects while the experience base is establishing itself in the United States.

Strategies:
- Develop Design Standards for Offshore Wind Energy Systems
- Integrate Environmental Condition and Design Parameters
- Tailor Support Structure Designs to Site-Specific Conditions
- Achieve High Levels of Wind System Availability and Performance through Optimized Approaches to Operations and Maintenance
- Address Power Transmission and Grid Interconnection Issues
- Develop and Leverage Expertise

To achieve viable offshore U.S. wind energy technologies, the issue of site accessibility limitations (a result of harsh conditions that can occur in the ocean) and the resulting impacts on turbine

THIS DOCUMENT WAS PRODUCED BY AN OUTSIDE PARTY AND SUBMITTED TO THE OBAMA-BIDEN TRANSITION PROJECT.

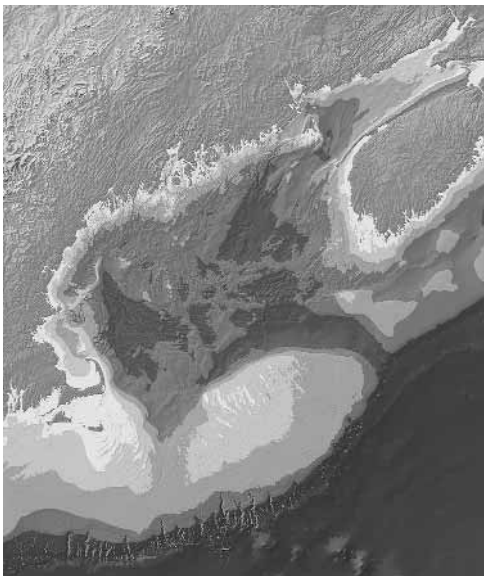

Gulf of Maine Bathymetry

availability, reliability, safety, and project economics must be addressed. The development of a viable regional service infrastructure and strategies will overcome these and other barriers. The anticipated injection of large amounts of new wind-based generation into the existing transmission grid will need to be managed technically through well-planned studies and conceptual designs, with the added benefit of maximizing the market value of wind-based electricity.

Progress is needed on several fronts to advance wind technology to accommodate the long-term challenges of sustainable offshore wind energy development, as outlined below. Further, it will be important for engineers to design an offshore wind system with appropriate consideration of issues related to maintaining the integrity of marine ecosystems and minimizing adverse impacts.

Advance Technology Development

Strategy 1.1
Develop Design Standards for Offshore Wind Energy Systems

Develop standards and guidelines that establish minimum specifications for offshore wind structures.

Near Term:

- Build upon existing results of International Electrotechnical Commission 61400-3, which is a pending international design standard for offshore wind turbines.[4]
- Collaborate with marine engineering disciplines experienced in deep water applications to determine the parameters needed to address engineering, environmental, and other criteria.
  - Collaborate with Minerals Management Service and other regulatory bodies in anticipation of their safety and inspection oversight role.
- Conduct a gap analysis to identify standards, guidelines, and design parameters that are lacking or unavailable, and recommend approaches for addressing deficiencies.
- Compile and evaluate the applicability of lessons learned from onshore turbine design and siting, including design approaches for minimizing environmental impacts (e.g., avian interactions).

Strategy 1.2
Integrate Environmental Condition and Design Parameters

Quantitative information about the geologic, oceanic, biological, and atmospheric environments is necessary to establish design criteria for offshore wind system structures.

Near Term:

- Compile a comprehensive inventory of existing empirical databases and sources (e.g., a wind and wave spectrum resource atlas, habitat maps, species distribution and relative abundance).
- Identify sources of design parameters established for offshore structures in other industries (e.g., American Petroleum Institute) and marine engineering applications.
- Assess and apply integrative and predictive models (e.g., hindcasting) to construct regionally consistent summaries of design parameters.
- Assess the adequacy of existing databases to define design parameters and identify critical data gaps.

Medium Term:

- Develop and implement a measurement plan to obtain missing critical data.
- Develop advanced measurement sensors and techniques to obtain data that are too expensive or impractical to collect using conventional means.
- Compile an atlas of offshore design parameters.

Strategy 1.3
Tailor Support Structure Designs to Site-Specific Conditions

Suitable support structure designs, including bottom-attachment techniques, are needed to accommodate a range of site conditions found in the Northeast.

Near Term:

- Define foundation design classifications and the governing design parameters and step functions.
- Determine design classes appropriate for offshore conditions and environmental

4. Quarton, D.C. *An International Design Standard for Offshore Wind Turbines*. Proceedings of World Renewable Energy Congress VIII. Elsevier Ltd, 2004.

sensitivities in the Northeast, and develop preliminary design specifications.
- Conduct preliminary costing studies for the leading classes and prioritize components having cost reduction potential.
- Evaluate available foundation design tools for simulating all load conditions, including those introduced by the tower and turbine components; identify gaps and priorities.
- Develop a research program to address foundation design uncertainties and to pursue the development of advanced designs with cost reduction objectives.
- Assess the need for testing facilities (e.g., wave motion simulation platform, blade testing facilities, full-scale ocean test beds).

Medium Term:
- Advance the development and validation of numerical computer models to accurately simulate dynamic loads imposed throughout the entire wind turbine structure by atmospheric and hydrodynamic forces.
- Tailor system designs for environmental compatibility and low potential impacts on marine ecosystems.

Strategy 1.4
Achieve High Levels of Wind Energy System Availability and Performance through Optimized Approaches to Operations and Maintenance

Parallel efforts are needed to develop advanced technology and infrastructure to facilitate the construction and reliable operation of offshore wind plants.

Near Term:
- Assess typical field failure conditions and the ability to detect and diagnose them with advanced monitoring techniques.
- Conduct research into self-diagnostic and intelligent systems (e.g., enhanced Supervisory Control and Data Acquisition) that can be integrated into the turbine operating system, and optimized fleet maintenance models.

Medium Term:
- Develop specialty sensors and software.
- Investigate methods to improve accessibility of projects from land.
  - Interact with regulatory agencies, including: Minerals Management Service (MMS), Occupational Safety and Health Administration (OSHA), and Federal Aviation Administration (FAA) to establish approved access and personnel transfer procedures.
- Form a collaborative task group to define infrastructure requirements, identify existing resources available in marine industries, and explore opportunities for developing local and/or regional offshore wind infrastructure capability.

Long Term:
- Deploy, test, and analyze results.

Strategy 1.5
Address Power Transmission and Grid Interconnection Issues

The delivery and injection of large amounts of wind-based generation into existing electrical grids requires long-range planning, potential investments in system upgrades, and effective grid management and operating strategies.

Near Term:
- Evaluate the ability of the Northeast's coastal grid to accept large injections of wind generation and determine necessary levels of grid upgrades and associated investments.

Medium Term:
- Monitor advancements in transmission cable technology for their applicability to offshore wind projects.
- Assess the direct current (DC) alternative for long-distance transmission, including trade-off studies with alternating current (AC) transmission.
- Assess the concept of long-range transmission trunk lines for interconnecting wind plants at sea.
- Obtain representative data on expected wind plant production variability at multiple time scales (e.g., 1-second, 10-minute, and 1-hour) so that potential grid impacts can be simulated.
- Conduct a technology and cost feasibility analysis of alternatives to conventional electric production and delivery (e.g., non-electric options such as pneumatic air, hydrogen); assess opportunities.
- Coordinate with regional transmission system planners to ensure scenarios for large levels of offshore wind power are included in system upgrade and expansion analysis and planning.
- Evaluate impact of large amounts of wind energy on: 1) power system functioning; and 2) wholesale market design and efficiency.

THIS DOCUMENT WAS PRODUCED BY AN OUTSIDE PARTY AND SUBMITTED TO THE OBAMA-BIDEN TRANSITION PROJECT.

Long Term:

- Assess and advance the capabilities and value of short-term forecasting of wind plant output to optimize grid system operations.

ADVANCE TECHNOLOGY DEVELOPMENT

Strategy 1.6
Develop and Leverage Expertise

Investments in intellectual resources and experience building are essential to the advancement of the state-of-the-art offshore wind energy systems.

Near Term:

- Support participation by appropriate parties in international collaborative activities to stay abreast of technological developments and lessons learned from project experiences abroad.
  - Attend conferences, workshops, and technical task group meetings.
  - Seek joint research initiatives, including the utilization of existing offshore projects to collect relevant research and validation data on loads, structural dynamics, and environmental parameters.
- Build a broader base of knowledge about wind energy in the oil and gas industry to facilitate integration goals.
  - Participate in joint conferences and workshops.
  - Include oil and gas industry representatives on offshore wind technology task groups.
- Initiate collaborative discussion with experts in marine biology, wildlife behavioral sciences, fisheries, and other relevant disciplines.

Medium Term:

- Develop and support interdisciplinary research and training activities in offshore wind energy.
  - Facilitate public-private sector interactions.
  - Promote international student exchanges between universities and work-study programs with industry.

2 Achieve Environmental Compatibility

Wind power offers environmental benefits, but wind energy installations often face opposition due to potential, perceived, and actual environmental impacts. Beyond technical and economic issues, the sustainability of an offshore wind power industry in the United States will depend on focusing on compatibility and impact mitigation as high design priorities, limiting the known impacts, and improving understanding of the interactions that will occur between offshore wind development and marine ecosystems in the United States.

Strategies:

- Identify Current Conditions and Trends of Marine Ecosystems and Ocean Uses
- Identify Potential Areas for Offshore Wind Energy Development
- Identify Potential Impacts and Environmental Changes from Offshore Wind Energy Systems
- Identify Appropriate and Effective Mitigation Strategies for Potential Environmental Impacts and Conflicting Uses
- Document and Quantify Environmental Benefits

The offshore environment is a vast and important public trust resource. Marine ecosystems provide a variety of essential services critical to the well-being of all biological species, including humans. Demonstrating the compatibility of offshore wind energy systems with ecological systems and human uses of the ocean will be required for offshore wind energy development to proceed with the necessary public support.

In order to proceed responsibly with the siting of offshore wind energy systems, it will be important to first characterize the marine environment to understand current conditions. This is an opportunity to build on what has already been documented about the ecology and uses of the offshore environment. The next step will be to identify gaps in knowledge and begin new research to answer pertinent questions. The strategy for addressing environmental and other marine use issues will necessarily include data collection, synthesis of existing data, and new research into effects of wind energy systems offshore and the technologies for studying them.

The offshore wind resource, particularly in the Northeast, is enormous. Discussion about development of offshore wind energy systems often focuses on the location of the strongest wind resource. However, in order to identify environmentally appropriate and publicly acceptable

THIS DOCUMENT WAS PRODUCED BY AN OUTSIDE PARTY AND SUBMITTED TO THE OBAMA-BIDEN TRANSITION PROJECT.

sites, locations selected for development should combine the strongest wind resource with areas of least impact on marine ecosystems, sensitive species, and other uses of the ocean.

As a preliminary screen, narrowing environmental research to sites with the best wind resource will help create manageable research projects that concentrate on specific geographic areas and, therefore, particular marine species, geology, and ocean uses.

In addition, existing methodologies for determining the environmental impacts of constructing and operating turbines and transmitting electricity to shore should be reviewed. Where well-developed procedures do not exist, the next task will be to develop new methods for identifying and measuring impact. Lessons from other offshore developments—for example, oil and gas drilling facilities—could be useful. However, new techniques and methods will be needed that apply directly to wind facilities. This will require coordination among academic institutions, public and non-governmental organizations, and the private sector.

Beyond ecological and habitat concerns, research into the potential impacts of wind energy systems on archeological resources, and existing military, commercial, recreational, and other marine activities will also need to be undertaken in order to identify potential sites for development.

These challenges will best be addressed through an interactive, multi- and inter-disciplinary, tiered evaluation process that incorporates adaptive management techniques. There are limits to the ability to predict impacts absent actual experience with offshore installations; initial developments must be used effectively as learning laboratories to reduce uncertainty about how wind energy systems interact with the marine environment.

As impacts are better understood, mitigation strategies to reduce or eliminate the impact should be investigated. Mitigation techniques in use by other offshore ocean industries and in Europe should be assessed. Where relevant, these methods should be applied to the development and modification of offshore wind energy systems in the United States. As systems progress through the construction, operation, upgrade, and/or decommissioning stages, new mitigation techniques may be required as unanticipated impacts arise. High priority should be placed on developing protocols for incorporating lessons learned into future facility design.

Photo courtesy of NOAA Photo Library (http://www.photolib.noaa.gov/).

Finally, quantification and documentation of the environmental and health benefits of offshore wind energy systems, such as the lack of harmful emissions, will be important in order to fully characterize the public benefits of offshore wind development. Protocols for quantifying, describing, and publicizing these benefits are needed, and may require the development of new tools and methods to provide complete and accurate measures of the benefits.

Achieve Environmental Compatibility

Overall Approach

It is essential that current knowledge of environmental and user group sensitivities be incorporated into the offshore wind energy system design process at the earliest stage and that the process engages industry, government, academic research institutions, environmental groups, and user interest groups on an ongoing basis.

Some of the following activities will proceed concurrently rather than in sequence:

- Identify site characteristics that would be promising or discouraging to offshore wind development.
- Document existing uses, including Marine Protected Areas (MPAs) and sensitive habitat types, migration corridors, commercial fishing areas, shipping routes, and other uses.
- Overlay existing uses/sensitive areas with wind resource and wind development criteria to identify

THIS DOCUMENT WAS PRODUCED BY AN OUTSIDE PARTY AND SUBMITTED TO THE OBAMA-BIDEN TRANSITION PROJECT.

the areas with least conflicts and highest wind development potential. Focus on these highlighted areas:

- Establish preliminary criteria for areas to avoid or eliminate from consideration.
- Identify information gaps.
- Engage in necessary data collection.
- Develop protocols for establishing site-specific baseline information, and monitoring protocols for assessing impacts during and after construction.
- Permit initial development at initially screened sites and monitor for ecosystem interactions using established protocols.
- Determine how to mitigate documented impacts, through engineering or site re-configuration where possible.
- Cycle data generated through this process back into screening process.
- Create opportunities to vet lessons learned through formal and informal peer review processes including all interested parties.

Achieve Environmental Compatibility

This tiered process could be designed through a Programmatic Environmental Impact Study (PEIS). Additional detail on the implementation of this process is provided in the strategies below.

Strategy 2.1
Identify Current Conditions and Trends of Marine Ecosystems and Ocean Uses

In order to be sensitive to unique marine environmental conditions and ensure that wind energy system development results in minimal impacts on ecosystems and other uses of the marine environment, it is imperative to establish current marine conditions and trends prior to siting facilities. Activities to gather information on the current and past states of marine ecosystems and on other uses of the ocean could include:

Near Term:

- Compile existing information on current conditions and trends of marine habitat and geology.
  - Assemble compiled existing information on migration patterns, critical habitats, and species abundance and distribution to begin to define first tier areas that would be excluded for consideration.
  - Create/compile Geographic Information System (GIS) formats for this data.
  - Make existing information public and accessible.
  - Conduct workshops to facilitate interdisciplinary cooperation.
- Incorporate information available about migration patterns of marine species (e.g., what is known from fisheries' by-catch, stock assessments, marine mammal and pelagic and seabird distribution) to identify past and current conditions and identify known characteristics of high-use feeding, nursery, and migration areas.
  - Take advantage of existing initiatives and models for mapping multiple characteristics (e.g., Gulf of Maine Mapping Initiative, National Oceanic & Atmospheric Administration's marine geological survey).
  - Explore approaches used in Europe and determine what can be applied in the U.S.
  - Collaborate with scientific and research institutions and other industries that are conducting similar research and mapping activities.
- Create and/or integrate GIS information on ocean uses, including fishing areas, fixed structures, shipping, recreation areas, marine archeological sites, and military security zones.
- Create collaborative marine wildlife working groups consisting of representatives from leading scientific institutions, consulting firms, non-governmental organizations, state and federal government agencies, and others to continue to identify research needs, conduct studies, and modify the information database for ocean ecosystems and marine uses.
- Begin research on known information gaps (e.g., electromagnetic field and noise impacts on marine mammals; sea bed conditions).
- Define obvious exclusion zones; determine geographic focus for developing protocols.

Medium Term:

- Identify information gaps that require additional research and develop research road map.
- Develop protocols, criteria, and models for monitoring studies and other research needs.

Strategy 2.2
Identify Potential Areas for Offshore Wind Energy Development

To responsibly develop offshore wind energy systems, it will be necessary to overlay the best

available information on wind resources and environmental conditions.

Near Term:
- Develop a process for screening for sensitivity.
- Develop preliminary criteria for excluding sites.
- Combine marine use/environmental information with meteorological, oceanographic, geologic, and other data parameters to develop constraint maps for use in determining sites most suitable for wind energy development.
- In consultation with interested parties, develop criteria for how to determine sites with fewest anticipated adverse impacts.

Medium to Long Term:
- Monitor and assess the ecosystems and habitat use at sites of high development potential.
- Conduct a strategic environmental assessment that is updated periodically to incorporate what is learned about impacts (see Strategy 2.1).

Strategy 2.3
Identify Potential Impacts and Environmental Changes from Offshore Wind Energy Systems

In order to improve support for and reduce opposition to offshore wind energy systems, including concerns about impacts on the natural and human marine environment, development efforts must be thoughtful, forward-thinking, and anticipate potential impacts with an eye on preventing them from occurring. Methods to accomplish this include:

Near Term:
- Establish a methodology for determining and evaluating environmental footprints of offshore wind energy systems, including construction activities, acoustic and lighting impacts, changes in sediment transport, and avian and marine mammal interactions.
- Review information on other offshore uses (e.g., oil/gas platforms, minerals collection, European wind projects) for impacts/changes and apply knowledge to determine potential impacts of offshore wind energy systems.
- Develop protocols and new technology to assess and monitor impacts.
- Apply analogous lessons learned from onshore wind facilities to offshore sites, systems, and plans.

Medium Term:
- Conduct preliminary pre-construction monitoring of proposed development sites.
- Monitor sites that are developed, during and after construction.
- Identify gaps in information and conduct assessments to fill gaps.
- Incorporate lessons learned into the strategic environmental assessment.
- Develop methods to measure and evaluate cumulative impacts of wind energy systems.

Photo courtesy of NOAA Photo Library (http://www.photolib.noaa.gov/).

Long Term:
- Monitor existing wind energy systems for impacts and changes to marine environment.
- Incorporate new information into design process.

Strategy 2.4
Identify Appropriate and Effective Mitigation Strategies for Potential Environmental Impacts and Conflicting Uses

Achieve Environmental Compatibility

The introduction of offshore wind facilities will affect the environment in a variety of ways. The goal is to fully understand the interactions, and reduce harmful effects to the greatest extent possible through site layout, choice of structural components and materials, and construction/operation methods. In addition, unforeseen impacts (permanent or temporary) could result. Activities to address mitigation options and opportunities include:

Near Term:
- Develop a forum for early and continuing dialogue among offshore wind system engineers and marine interests.
- Review mitigation strategies of other offshore ocean uses (e.g., oil/gas platforms, mineral extraction) and identify those applicable to offshore wind energy systems.
- Investigate European mitigation strategies and apply those appropriate for the U.S.
- Working with regulators and affected interest groups, determine acceptable impact thresholds.
- Identify mitigation triggers and options for decommissioning offshore wind projects.

THIS DOCUMENT WAS PRODUCED BY AN OUTSIDE PARTY AND SUBMITTED TO THE OBAMA-BIDEN TRANSITION PROJECT.

Achieve Environmental Compatibility

Medium Term:
- Develop new technology, strategy, and mitigation approaches.
- Improve wind plant technology, research methods, and facility design, incorporating adaptive management techniques.
- Collaborate with engineers and other technical specialists to develop mitigation measures or redesign systems to reduce impacts to acceptable levels.

Strategy 2.5
Document and Quantify Environmental Benefits

Like all clean, renewable energy sources, offshore wind energy development will result in environmental and public health benefits. It is also likely to produce unique benefits to the human and marine environment. In order to fully evaluate and publicize the benefits of offshore wind energy systems, the following activities should be undertaken:

Near Term:
- Quantify and describe qualitative environmental benefits.
- Develop new tools and methods to quantify environmental benefits.
- Identify benefits of facilities and resulting wind power generation in terms of greenhouse gas emission reductions, air quality improvements, and national energy security.

Medium Term:
- Develop tools to monitor and evaluate tourist and recreational uses of area around wind energy developments to determine if use changes.
- Determine if habitat changes resulting from introduction of new structural features on the seabed have beneficial aspects.
- Develop tools to measure indirect benefits (e.g., reduced pollution from fossil fuel generated electricity, reduced destruction of lands) and incorporate into environmental assessment.

3 Achieve Economic and Financial Viability

Although today's costs of offshore wind energy production are higher than onshore, expectations are that several factors working together will make offshore wind energy sources more cost effective. These factors include technology innovations, stronger wind regimes, economies of scale from large-scale development, close proximity to high-value load centers, and incentive programs responding to the public's growing demand for clean energy. Other influential factors are the uncertain price and supply of conventional energy sources, especially natural gas and oil, and the increasing regulatory pressures on emissions reductions by fossil fuel generation plants. The economic fate of offshore wind energy, therefore, rests on a combination of internal and external factors.

Strategies:
- Develop Current Understanding of Costs of Offshore Wind Energy Systems and Implement Research and Development Opportunities for Cost Reduction
- Evaluate Ownership and Financing Structures and Associated Risks
- Increase Availability of Long-Term Power Purchase Agreements
- Develop Confidence in Technology among Financial, Insurance, and Public Sectors

One of the key challenges is to implement an offshore program that achieves cost-competitiveness. Various engineering, environmental, and regulatory/policy action items have been recommended within this *Framework* to gain overall acceptance from several different and important perspectives. But economic viability will also have to be achieved in order for offshore wind energy systems to become a reality in a sustainable way. Therefore, proposed approaches and solutions to offshore development in all their dimensions must have favorable economics as a primary objective.

A related challenge is the fact that many costs and risk factors are not known or well understood. Concerted efforts are needed to understand all costs throughout the life cycle of a wind project, from concept development to decommissioning. Much can be learned from ongoing activity in Europe, but new

THIS DOCUMENT WAS PRODUCED BY AN OUTSIDE PARTY AND SUBMITTED TO THE OBAMA-BIDEN TRANSITION PROJECT.

challenges will arise as installations move into deeper water.

Another challenge is to attract developers, investors, energy customers, insurers, and the public at-large toward active participation in offshore development. The large levels of investment and risk required of offshore wind development may require a different profile of market participants compared to onshore wind projects, at least at the outset. These participants will likely require a fairly high degree of confidence in the technology and its ability to supply power safely and reliably over the long term before they get substantially involved. This presents a classic chicken-and-egg dilemma: how to provide sufficient investments in a concept so that it reaches a level of maturity whereby future investments become self-sustaining. This challenge could be addressed through public policy and other models.

Photo courtesy of NOAA Photo Library (http://www.photolib.noaa.gov/).

Many economic uncertainties can be overcome with new ideas, targeted research, field experience, and multi-disciplinary collaboration, including offshore oil and gas experience. The following action items are designed to identify and address specific unknowns in an interactive fashion with the other strategic areas. A desired outcome is the discovery of the best pathways for achieving major cost reductions. The proposed activities are also intended to engage the financial and insurance communities and identify viable business models.

Strategy 3.1
Develop Current Understanding of Costs of Offshore Wind Energy Systems and Implement Research and Development Opportunities for Cost Reduction

Near Term:

- Survey the European wind industry experience and develop a database of reliable cost data and establish reliable material and installation costs and future cost trajectories for designs most appropriate for the U.S..
- Produce a detailed life-cycle cost breakdown for all components of a project, including hardware, labor, support services, transmission, planning, permitting, maintenance, and decommissioning.
- Identify and prioritize components having largest cost reduction potential.
- Identify unknown cost and risk factors.
- Conduct cost sensitivity and trade-off studies.

Medium Term:

- Quantify potential for economies of scale.
- Identify and prioritize best opportunities for cost reduction, and define barriers to cost reduction.
- Supply feedback to siting, engineering, and design research efforts.

Strategy 3.2
Evaluate Ownership and Financing Structures and Associated Risks

Medium Term:

- Compare current ownership/financing structures and risk assessment approaches for onshore and offshore projects.
- Identify sources of risk and liability, their associated uncertainties, and mechanisms for addressing them.
- Identify existing types and cost of available insurance coverage and new types that may be warranted.
- Characterize risk impacts on access to and terms of financing and insurance.
- Propose new ownership and financing structures tailored to offshore wind.
- Develop models for pooling or subsidizing risk for early projects.

Strategy 3.3 Increase Availability of Long-Term Power Purchase Agreements

Near Term:

- Identify barriers to long-term power purchase agreements.

Medium to Long Term:

- Work on a collaborative basis to address barriers.
- Investigate role of government directly purchasing energy from offshore wind.
- Investigate positive linkages with state Renewable Portfolio Standard programs, long-term Renewable Energy Credit programs, and others.

THIS DOCUMENT WAS PRODUCED BY AN OUTSIDE PARTY AND SUBMITTED TO THE OBAMA-BIDEN TRANSITION PROJECT.

- Investigate how control of large amounts of wind will affect long-term resource adequacy.
- Assess impacts of wind energy on long-term development and provision of other resources in the overall RTO/ISO resource portfolio.

Achieve Economic and Financial Viability

Strategy 3.4
Develop Confidence in Technology among Financial, Insurance, and Public Sectors

Near Term:
- Address challenges to public acceptance to increase likelihood that facilities can be developed in a cost-effective manner.

Medium to Long Term:
- Proactively collaborate with financial, insurance, and public sectors to identify and address issues.
- Target these sectors in outreach programs.
- Address barriers in the technology, environmental, and regulatory/policy arenas that negatively impact long-term planning.

Long Term:
- Attain desired confidence levels via demonstration projects.

4 Clarify Roles for Regulation and Government Policies

While policies for offshore oil and gas development are well established, offshore wind energy development is unprecedented in the U.S. and therefore is unfamiliar ground for the regulatory and policy arenas. Federal and state agencies have been using the existing regulatory frameworks to permit proposed offshore wind projects, but additional planning and resource management strategies are needed to address the specific requirements of a robust offshore wind energy development, as well as other emerging ocean renewable energy technologies such as wave, current, and tidal power.

Strategies:
- Establish a Process for Siting and Development that Gains Public Acceptance
- Develop Policies with a Tiered and Phased Incentive Program to Foster Early Development of Offshore Wind Energy
- Create Stable Rules and Processes for Transmission and Grid Integration

Until passage of the Energy Policy Act of 2005, one component of the permitting process for offshore wind projects was regulated under the Rivers and Harbors Act as implemented by the Army Corps of Engineers (ACOE). The ACOE, as a federal agency authorizing activities, also implemented the National Environmental Policy Act (NEPA) for these projects. Many questions have been raised regarding the suitability, adequacy, and appropriateness of the Rivers and Harbors Act for the permitting of private facilities that use public resources in the ocean. A frequent comment is that the Act does not provide a mechanism for compensating the public for the private use of the ocean resource.

With the passage of the Energy Policy Act of 2005, the U.S. Department of Interior's Minerals Management Service (MMS) received authority to act as the lead agency for permitting offshore wind projects. The MMS is also the agency responsible for regulating offshore oil and gas development. The Act requires the Secretary of the Interior to establish appropriate payments to ensure a fair return to the United States from these projects, and to share revenues associated with projects within 3 miles of state waters with the appropriate coastal states. The Act also provides for coordination and consultation with affected state and local governments, promotes competition, and requires a comprehensive regulatory program.

The initial projects will provide government approval authorities with the first domestic experience in decision-making and interagency coordination for offshore wind projects, including weighing various public interests to determine if the project is contrary to the public interest.

High-level federal efforts are underway to address use of the oceans, coasts, and Great Lakes in a coordinated and integrated manner. To meet the challenges raised by the U.S. Commission on Ocean

Policy, President George W. Bush issued an Executive Order on December 17, 2004, establishing the U.S. Ocean Action Plan (OAP) with the intent of making the Nation's waters cleaner, healthier, and more productive. The policies carried out under the plan and related activities will establish strong partnerships between federal, state, tribal, and local governments; the private sector; international partners; and other interests. The Executive Order created a new Cabinet-level Committee on Ocean Policy to focus on accomplishing the themes in the OAP, including infusion of sound science in resource management decisions, promotion of ocean literacy, strengthening of infrastructure facilities, advancment of observation and modeling capabilities, and fostering of interagency partnerships.

Nysted Offshore Wind Farm at Rødsand, Denmark
Photo by Jack Coleman

In addition to the regulatory management issues that face the development of offshore wind, there are several policy issues that will also arise. Government agencies have played significant roles in supporting other energy sources, through financial support for research and development, production tax credits, state renewable portfolio standards, and through direct energy purchases of energy. In order for offshore wind energy to be commercially successful in the highly competitive energy markets, similar government efforts may be needed.

Another challenge in the regulatory arena before offshore wind can become viable is the need for methods to coordinate planning for siting and development on a regional basis. As part of the effort to plan proactively to address siting issues and minimize conflicts with other uses, regional collaboration mechanisms will be needed. Planning must also appropriately reflect the principles of the *Environmental Justice Strategy Executive Order 12898*.

In the coming months, MMS will issue interim guidelines and develop regulations for offshore wind projects. These regulations and policies will play a pivotal role in shaping the course and pace of future offshore wind energy development. Collaboration, outreach, education, and planning efforts will be needed to facilitate deployment of offshore wind energy systems.

Strategy 4.1
Establish a Process for Siting and Development that Gains Public Acceptance

To address concerns about the siting of offshore wind energy systems, it will be important to clarify the process of designating and allocating potential sites, address compensation for use of the public wind and ocean resources, and plan for integration of facilities with existing marine uses and environmental constraints. The activities that may need to be part of this effort include:

Clarify Roles for Regulation and Government Policies

Near Term:

- Identify regulatory solutions that establish a predictable and transparent process:
  - Engage in public education and outreach about the need to develop an appropriate approval process for offshore wind energy.
  - Consult with interested groups about the development of regulations regarding siting, development, and leasing/licensing procedures.
- Develop a streamlined approach that incorporates the existing regulations that will still apply with the new regulations and policies being developed through a collaborative process.
  - Link with ocean policy groups and coordinate with other ocean planning efforts.
  - Conduct outreach and education.
- Establish an environmental review process for offshore wind energy development to be implemented at the appropriate geographic levels.

Medium Term:

- Continue with short-term activities as needed.
- Establish a streamlined permitting and siting process for small- or limited-scale demonstration projects, perhaps with cooperative funding for projects.

THIS DOCUMENT WAS PRODUCED BY AN OUTSIDE PARTY AND SUBMITTED TO THE OBAMA-BIDEN TRANSITION PROJECT.

- Develop regulatory standards for operation, decommissioning, and environmental mitigation.

Strategy 4.2
Develop Policies with a Tiered and Phased Incentive Program to Foster Early Development of Offshore Wind Energy

While the goal is to have cost-competitive offshore wind energy in the next decade, reaching the point of cost-competitiveness will take action and experience. As initial projects are developed, incentive programs will be needed to foster and support them.

Near Term:
- Develop different scenarios and options for creating incentives.
  - Develop government (state and federal) long-term purchase agreements.
  - Analyze the desirability and feasibility of a government role in developing a DC transmission line running parallel to the Northeast coast to interconnect multiple offshore wind facilities and potentially other types of ocean-based energy facilities.
  - Support demonstration projects and shared infrastructure investments that will lead to cost competitiveness.
  - Analyze the benefits of continuing and expanding existing renewable energy supports, including tax credits, renewable energy credits, and others.
  - Co-locate wind energy with wave and current energy technologies for improved economies.
  - Grant access to pollution reduction credits.
  - Identify methods and resources to fund common or shared infrastructure.

Strategy 4.3
Create Stable Rules and Processes for Transmission and Grid Integration

It will be important to create a predictable transmission and grid integration regulatory environment to facilitate the interconnection of future offshore wind energy facilities. Activities to address this goal include:

Near Term:
- Monitor national and regional power system rulemaking regarding implications for offshore wind energy.
- Coordinate with state and local energy providers.

Medium to Long Term:
- Commission an analysis of the barriers, challenges, and options for addressing grid integration. The analysis should include recommendations for implementation activities.

Clarify Roles for Regulation and Government Policies

5 Establish Leadership, Coordination, Collaboration, and Support

Achieving a cost-competitive offshore wind industry will require significant advances in the technology and policy arenas. Many of the challenges require an integrated approach. For example, public acceptance of offshore wind facilities depends on the existence of a credible planning and permitting process that ensures the recognition of public benefits from use of the resource. Once environmental concerns are identified, impacts can be addressed through employment of different types of turbines and foundations. Economic incentives and investor decisions, as well as the predictability of power purchases and prices, play a key role in the development of technologies appropriate for large-scale, deep-water applications.

Strategies:
- Establish a Credible Mechanism for Leadership, Collaboration, and Support for Offshore Wind Energy Development
- Create and Maintain a Vision of Offshore Wind as Part of the Mainstream Energy Mix
- Attract, Apply, and Coordinate Resources
- Establish and Implement a Mechanism for Convening Parties Interested in Offshore Wind Energy
- Develop and Support a Coordinated Research Program to Accomplish Technical, Environmental, Economic, and Regulatory Goals
- Support Integration of Activities in All Arenas

Integrating all of the various efforts to address challenges and developing a mechanism to foster integration of collaboration among interested parties will improve the likelihood of offshore wind development success. Many groups have expressed an interest in ongoing, proactive collaboration to identify issues early and address them in ways that minimize unnecessary conflicts. Leadership on a national and regional level will be needed.

Resources from multiple sources will be an essential component of the *Framework*'s implementation. Government agencies, especially the U.S. DOE, are currently investing in technology programs that support renewable energy. Other government agencies, like the Army Corps of Engineers and state authorizing agencies, will need to invest resources in permitting and environmental issues. Sixteen states have clean energy funds and are investing in renewable energy development. Significant technology development resources will also come from manufacturers of wind energy system components and from other private investments, supplemented by government support in some cases. A reasonable set of initial priority actions will need to be gleaned from the ambitious overall agenda set forth in this *Framework*.

A national collaborative can play an important role as it works to coordinate and leverage the resources to address the challenges in an efficient and synergistic manner. The level of resources needed to fund a collaborative approach will depend on the form the collaborative takes and on the roles its members play in providing and recruiting technical and financial support. Regional collaboratives will also be useful for addressing regional and local planning challenges and needs.

Collaborative forums, whether at the national or regional level, could consider any of the following strategies:

Strategy 5.1
Establish a Credible Mechanism for Leadership, Collaboration, and Support for Offshore Wind Energy Development

Near Term:

- Form well-defined and chartered collaborative organization(s) at the national and regional level to serve as the clearinghouse, coordination body, and source of spokespeople for the vision of sustainable offshore wind energy.
  - Determine whether each collaborative organization will be a new, freestanding organization or part of an existing one.
  - Determine the organizational and governance structure for each organization and its activities.
  - Drawing from the strategies outlined in this *Framework*, establish priorities for national and regional activities.
  - Develop five-year and annual work plans for the activities of each organization (suggested activities are outlined below).

Strategy 5.2
Create and Maintain a Vision of Offshore Wind as Part of the Mainstream Energy Mix

In order to ensure forward momentum for offshore wind, it is important that there are spokespeople and advocates for the vision who are highly visible to government entities, energy trade associations, public interest groups, and the media.

Near Term:

- Publicize the formation of the collaborative organization(s).
- Develop informational materials, website, and an outreach and marketing plan.

Photo courtesy of NOAA Photo Library (http://www.photolib.noaa.gov/).

- Implement the outreach and marketing plan with an intensive schedule of presentations, informational meetings, and media appearances and press releases.
- Establish coalitions with organizations having related goals.

THIS DOCUMENT WAS PRODUCED BY AN OUTSIDE PARTY AND SUBMITTED TO THE OBAMA-BIDEN TRANSITION PROJECT.

Medium Term:

- Develop progress reports and projected timetables for key milestones in the development of offshore wind energy capability, and disseminate this information as above.

Strategy 5.3
Attract, Apply, and Coordinate Resources

Adequate resources will be essential to accomplishing the strategies, as will the prioritization of where resources will be targeted and how they will be allocated.

Near Term:

- Develop a database of existing and potential funding sources that could be made available to implement elements of the *Framework*.
- Develop estimates of funding levels required for each element of the *Framework*.
- Act as a clearinghouse to track research activities and funding sources, and to identify additional funding needs.
- Develop a funding plan for sustaining or increasing the resources needed to implement the *Framework*.

Medium Term:

- Monitor funding availability and needs, and update priorities and fund raising activities.
- Identify opportunities to coordinate with other collaborative efforts in support of offshore renewable energy development (wave, current, and tidal).

Strategy 5.4
Establish and Implement a Mechanism for Convening Parties Interested in Offshore Wind Energy

Regular interaction among those having a stake in offshore wind development will foster coordination and synergy. Interested parties need to convene for proactive purposes, such as prioritizing issues and discussing options to address potential conflicts and opportunities, as well as for information exchange.

Near, Medium, and Long Term:

- Develop a stakeholder involvement plan, through consultation with stakeholders.
- Survey stakeholders annually to update issues and priorities to be addressed collaboratively.
- Plan and conduct workshops at least annually on specific issues.

Strategy 5.5
Develop and Support a Coordinated Research Program to Accomplish Technical, Environmental, Economic, and Regulatory Goals

Research is needed on many fronts to address the challenges of developing offshore wind energy. Support for technological research may be the largest and most challenging task. Research on environmental issues may be more site-specific in nature, but methodology development can be undertaken in the near term and later replicated across many sites. Policy analysis will be an ongoing task. On many research topics, defining the questions from multiple viewpoints will be necessary to ensure that the research is credible and acceptable to all interested parties. Coordination and team building among researchers from government (federal and state), industry, and academia is also an important objective.

Near Term:

- Build on interaction mechanisms described in Strategy 5.4, above, to collaboratively review research programs, results, and outstanding issues.
- Facilitate the organization of collaborative research programs.

Medium Term:

- Publicize research progress and results.

Strategy 5.6
Support Integration of Activities in All Arenas

It will be important for those working in various areas outlined in the *Framework* to periodically compare notes and obtain feedback as developments on various fronts emerge.

Near, Medium, and Long Term:

- Use national and regional collaboratives to bring together the full range of interests to discuss developments and findings.
- Evaluate progress in implementing the strategies on a regular basis, in consultation with interest groups and stakeholders.
- Develop web-based resources to assist in ongoing integration and outreach.

THIS DOCUMENT WAS PRODUCED BY AN OUTSIDE PARTY AND SUBMITTED TO THE OBAMA-BIDEN TRANSITION PROJECT.

Closing Comments

Offshore wind energy is poised to be an important part of the solution to what the National Commission on Energy Policy has called "America's energy stalemate." The recommendations outlined in this *Framework* are meant to serve as a compass to guide development of wind energy resources off the coasts of the United States.

Given the urgent need to meet future domestic energy needs while minimizing the addition of heat-trapping gases and toxic emissions into the atmosphere, the question this document attempts to address is not whether we should pursue offshore wind energy development but rather: *how can we develop this important new industry here in the United States in a way that will allow us to tap this vast resource in the most sustainable way?*

Successful offshore wind energy advancements will depend on a robust partnership among organizations, businesses, and agencies with diverse resources and expertise. This *Framework* calls for an unprecedented level of engagement in order to fully develop offshore wind energy's significant economic, environmental, and energy security opportunities for the United States.

Nysted Offshore Wind Farm at Rødsand, Denmark
Photo by Carl Borchert

THIS DOCUMENT WAS PRODUCED BY AN OUTSIDE PARTY AND SUBMITTED TO THE OBAMA-BIDEN TRANSITION PROJECT.

Participant List

Participation in these workshops to inform development of the *Framework for Offshore Wind Development in the United States* does not necessarily constitute support for offshore wind development in general or in any particular region.

Offshore Wind Energy Collaborative Workshop

RESOLVE, Inc.
1255 23rd Street, NW, Suite 275
Washington, DC 20009

February 10-11, 2005
Participant List

Ken Arnold
Founder, Chief Executive Officer
AMEC Paragon

Benjamin Bell
Power Generation Global Development
Offshore Wind - Americas
GE Energy

Thomas Bigford
Chief, Habitat Protection Division
Office of Habitat Conservation
U.S. National Oceanic & Atmospheric
Administration/National Marine Fisheries Service

Stan Calvert
Chief Engineer
Wind & Hydropower Technologies Program
U.S. Department of Energy

Jack Clarke
Director of Advocacy
Massachusetts Audubon Society

Rodney Cluck
Sociologist
U.S. Minerals Management Service

Coke Coakley
Senior Environmental Specialist
Florida Power & Light

Stephen Connors
Director
Analysis Group for Regional Electricity Alternatives
Massachusetts Institute of Technology

Fara Courtney
Principal / Marine Policy Specialist
Good Harbor Consulting

Walter Cruickshank
Deputy Director
U.S. Minerals Management Service

Dan Dolan
Principal
MMI Engineering

John Duff
Assistant Professor of Environmental Law
Department of Environmental, Earth and Ocean Sciences
University of Massachusetts, Boston

Peter Goldman
Director
Wind & Hydropower Technologies Program
U.S. Department of Energy

Robert Grace
President
Sustainable Energy Advantage, LLC

Neil Habig
Consultant
PPM Atlantic Renewables

Barbara Hill
Project Coordinator
Offshore Wind
Renewable Energy Trust
Massachusetts Technology Collaborative

Bruce Humenik
Senior Vice President
Applied Energy Group

Michele Jalbert
Legislative Assistant
Congressman William Delahunt

THIS DOCUMENT WAS PRODUCED BY AN OUTSIDE PARTY AND SUBMITTED TO THE OBAMA-BIDEN TRANSITION PROJECT.

Laurie Jodziewicz
Communications & Policy Specialist
American Wind Energy Association

Mark Kosakowski
Section Manager
Oceanography & Coastal Sciences
Ocean Surveys, Inc.

Helen Lister
Energy Finance
Fortis Bank

James Lyons
Advanced Technology Leader
GE Global Research

Charles McGowin
Technical Leader
Wind Power
Electric Power Research Institute

Richard Mercier
Director
Offshore Technology Research Center
Texas A&M University

Richard Michaud
Program Manager
Northeast Regional Office
U.S. Department of Energy

Walter Musial
Senior Engineer
National Renewable Energy Laboratory/National Wind Technology Center

Craig Olmsted
Vice President for Project Development
Cape Wind Associates, LLC

Simon Perkins
Field Ornithologist
Massachusetts Audubon Society

Bonnie Ram
Vice President
Environmental Programs
Energetics

Charles E. Smith
Senior Technical Advisor
U.S. Minerals Management Service

J. Charles Smith
Utility Wind Interest Group (UWIG)Technical Advisor
Nexgen Energy (UWIG)

Bonnie Spinazzola
Executive Director
Atlantic Offshore Lobstermen's Association

Roy Stoecker
Vice President
Energy and Environmental Analysts, Inc.

Dale Strickland
Vice President and Senior Ecologist
Western EcoSystems Technology

Jack Terrill
Fishery Administrator
National Marine Fisheries Service
U.S. National Oceanic & Atmospheric Administration

Bob Thresher
Director
National Wind Technology Center
National Renewable Energy Laboratory

Greg Watson
Vice President for Sustainable
Development & Renewable Energy
Renewable Energy Trust
Massachusetts Technology Collaborative

Mason Weinrich
Executive Director and Chief Scientist
The Whale Center of New England

Cynthia Wong
Business Development Manager
Vestas-Americas

Sharon Young
Marine Issues Field Director
Humane Society of the United States

Facilitation Team

Abby Arnold
Senior Mediator/Vice President
RESOLVE, Inc.

Bruce H. Bailey
President
AWS Truewind, LLC

Stephanie Nelson
Associate
RESOLVE, Inc.

Suzanne Orenstein
Mediator

THIS DOCUMENT WAS PRODUCED BY AN OUTSIDE PARTY AND SUBMITTED TO THE OBAMA-BIDEN TRANSITION PROJECT.

Offshore Wind Energy Collaborative Mini-Workshop

March 17, 2005
Participant List

Karen Adams
Chief, Permits & Enforcement
New England District
U.S. Army Corps of Engineers

Deerin Babb-Brott
Assistant Director
Massachusetts Office of Coastal Zone Management

Benjamin Bell
Vice President
Commercial Americas
GE Wind Energy

Peter Borrelli
Executive Director
Center for Coastal Studies

Dwayne Breger
Manager
Renewable Energy & Climate Change
Massachusetts Division of Energy Resources

Priscilla Brooks
Senior Economist and Director
Marine Conservation Program
Conservation Law Foundation

Fara Courtney
Principal / Marine Policy Specialist
Good Harbor Consulting

Susan Giordano
General Manager
Second Wind, Inc.

Christine Godfrey
Chief, Regulatory Division
New England District
U.S. Army Corps of Engineers

Betsy Higgins
Director
Office of Environmental Review
U.S. Environmental Protection Agency
Region 1

Barbara Hill
Project Coordinator
Offshore Wind
Renewable Energy Trust
Massachusetts Technology Collaborative

Alex Hoar
Ecological Services
U.S. Fish & Wildlife Service

Seth Kaplan
Senior Attorney and Director of the Clean Energy
Climate Change Program
Conservation Law Foundation

Vern Lang
U.S. Fish & Wildlife Service

Richard Michaud
Program Manager
Northeast Regional Office
U.S. Department of Energy

John Moskal
Region 1
U.S. Environmental Protection Agency

Suzanne Orenstein
Mediator

John Phillips
Director
New England Office
The Ocean Conservancy

Tim Timmerman
Environmental Scientist
Region 1
U.S. Environmental Protection Agency

Greg Watson
Vice President for Sustainable
Development & Renewable Energy
Renewable Energy Trust
Massachusetts Technology Collaborative

OBAMA-BIDEN TRANSITION PROJECT

THIS DOCUMENT WAS PRODUCED BY AN OUTSIDE PARTY AND SUBMITTED TO THE OBAMA-BIDEN TRANSITION PROJECT.

Notes

OBAMA-BIDEN TRANSITION PROJECT
THIS DOCUMENT WAS PRODUCED BY AN OUTSIDE PARTY AND SUBMITTED TO THE OBAMA-BIDEN TRANSITION PROJECT.

Notes